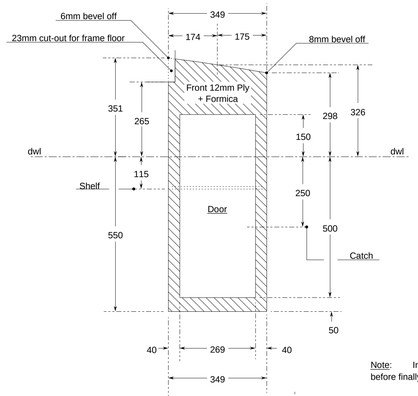

Note: Hang door on on aft edge on two 50mm butt hinges (narrow suite) with Timage 181c00c catch at about 400 from bottom.

Secure panels to bulkhead and Unit 017 with 15□ cleating. Secure to hull with bed of WEST.

Probably best to run 3 x 5 deep rebate around edges abutting other units and then make Sikaflex seam once installed.

Note: Install seacocks before finally installing unit.

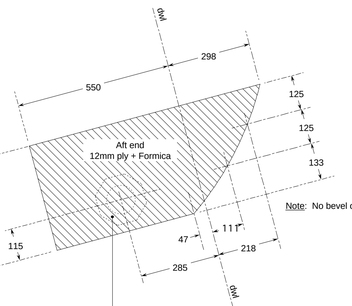

Note: No bevel on bottom edge

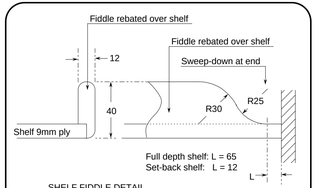

SHELF FIDDLE DETAIL
Scale 1/2

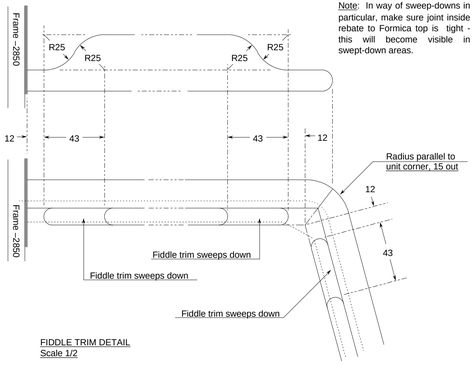

Note: In way of sweep-downs in particular, make sure joint inside rebate to Formica top is tight - this will become visible in swept-down areas.

FIDDLE TRIM DETAIL
Scale 1/2

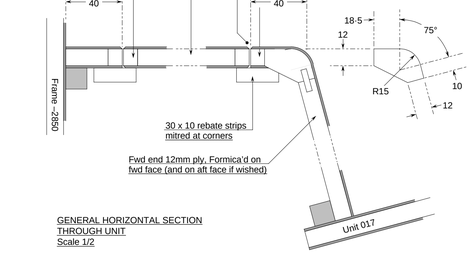

Note: Check that Formica will post-form (with heat) around 15mm radius. If radius needs to be increased then fiddle trim will need modifying.

GENERAL HORIZONTAL SECTION
THROUGH UNIT
Scale 1/2

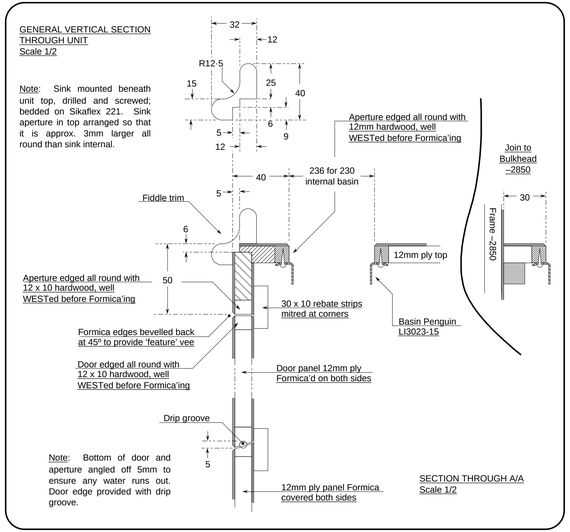

Note: Sink mounted beneath unit top, drilled and screwed; bedded on Sikaflex 221. Sink aperture in top arranged so that it is approx. 3mm larger all round than sink internal.

Note: Bottom of door and aperture angled off 5mm to ensure any water runs out. Door edge provided with drip groove.

General Notes:

1. All dimensions are in millimetres unless otherwise noted.
2. The Zero Point is the intersection of the Datum Water Line (dwl) with the stemface.
3. Positions are measured fwd and aft (marked "-") of the Zero Point.
4. Heights are measured above and below (marked "-") the dwl.
5. Offsets are measured each side of the fore-&-aft centreline (marked "℄" or c/line).
6. Waterlines are designated "wl" followed by their height.
7. Buttocks are designated "b" followed by their offset.
8. Diagonals are designated "d" followed by their start height on the centreline and their angle to it.
9. Offsets on diagonals are measured down the angle of the diagonal.
10. Offsets are to inside of skin unless noted otherwise.

Whisstock
boats and boat plans
support@whisstock.com

Boat 067
Unit 18
WC Basin Unit

Scale	1/10 & 1/2
Date	20/09/2008
Plan No.	067/010/18
Issue No.	01 web
Drawing Size	895 x 305 – 35" x 12"

© Bmarkweb Ltd 2008 All Rights Reserved